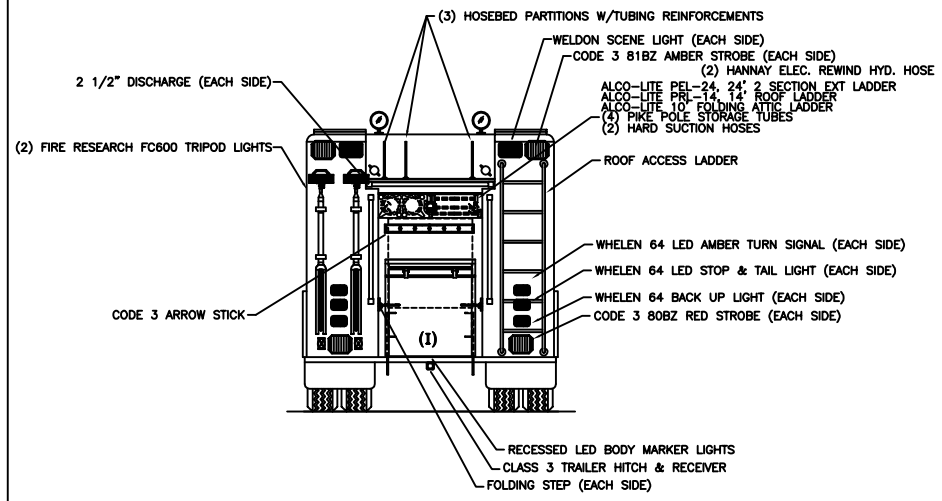

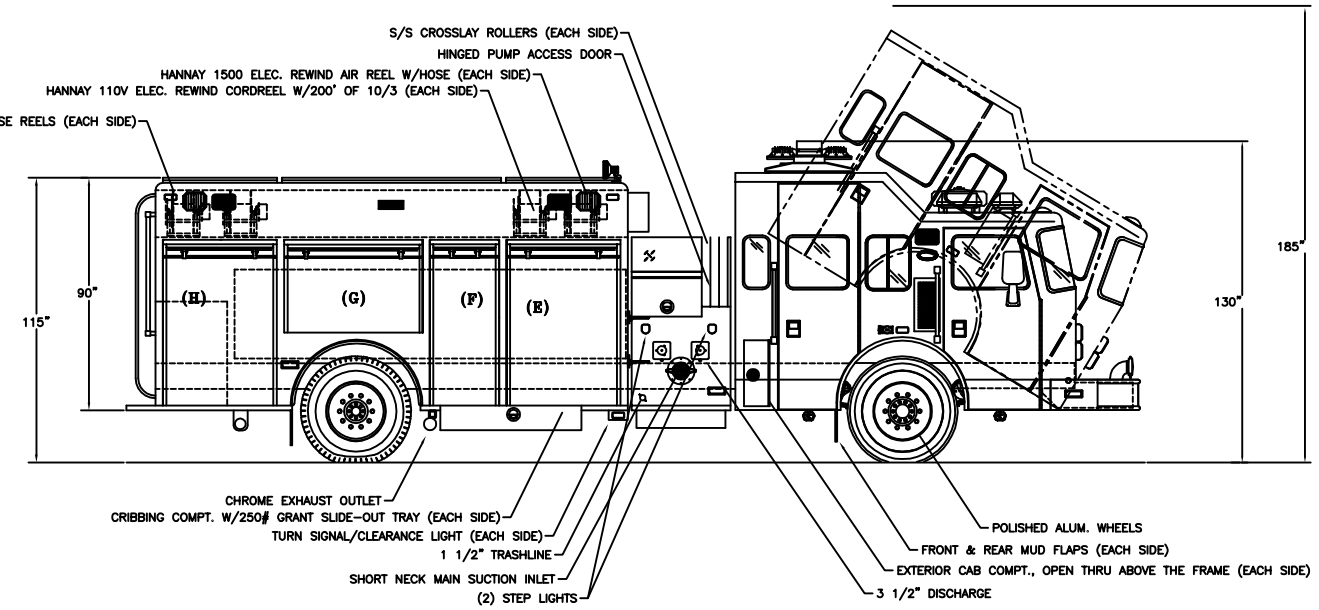

NOTE:
1. (7) ZIAMATIC WALKAWAY BRACKETS.
2. OFFICERS SCBA SEAT KME STYLE.
3. (2) REAR FACING KME STYLE SCBA, OUTBOARD.
4. (4) PERSON FORWARD FACING BENCH SEAT.
5. (7) MASK HOLDER POUCH'S.
6. INSTALL (2) CUSTOMER FURNISHED ANTENNAS.
7. 110,000 PSI FRAME W/LINER.
8. HEATED AUTO MOISTURER EJECTOR
9. ON-SPOT AUTO TIRE CHAINS.
10. TRACTION TREAD REAR TIRES.
11. GOODYEAR FRONT & REAR TIRES.
12. JACOBS ENGINE BRAKE.
13. LEECE-NEVILLE 320 AMP ALT.
14. KUSSMAUL 091-9-DPP AUTO CHARGE D PUMP PLUS
15. 12V POWER & GROUND CIRCUIT.
16. AKRON 3126-125 GPM FOAM EDUCTOR.
17. 3/16" ALUM. BODY.
18. HOSEBED CAPACITY = 1000' OF 4" & 500' OF 3".
19. (8) PAINTED ROLL-O-MATIC ROLL-UP DOORS.
20. 20KW HYD. PTO GENERATOR TO BE LOCATED & POWERED OFF AMKUS SYSTEM.
21. (3) 220V CIRCUIT BREAKERS.
22. HALE TPM SYSTEM.
23. AMKUS ULTIMATE SYSTEM.
24. ROAD SAFETY KIT.
25. ENGINE BLOCK HEATER
26. EVACUATION BUTTON ON PUMP PANEL.
27.

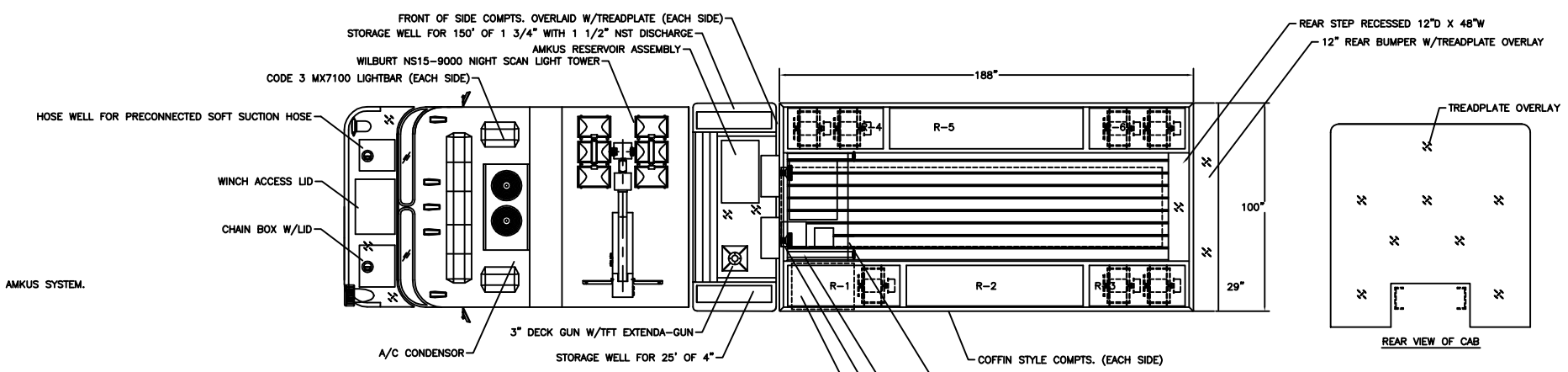

REAR VIEW OF CAB

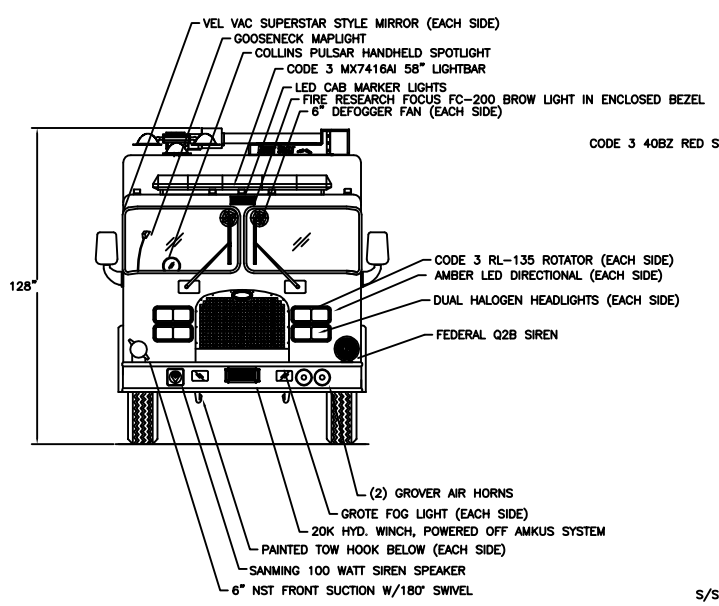

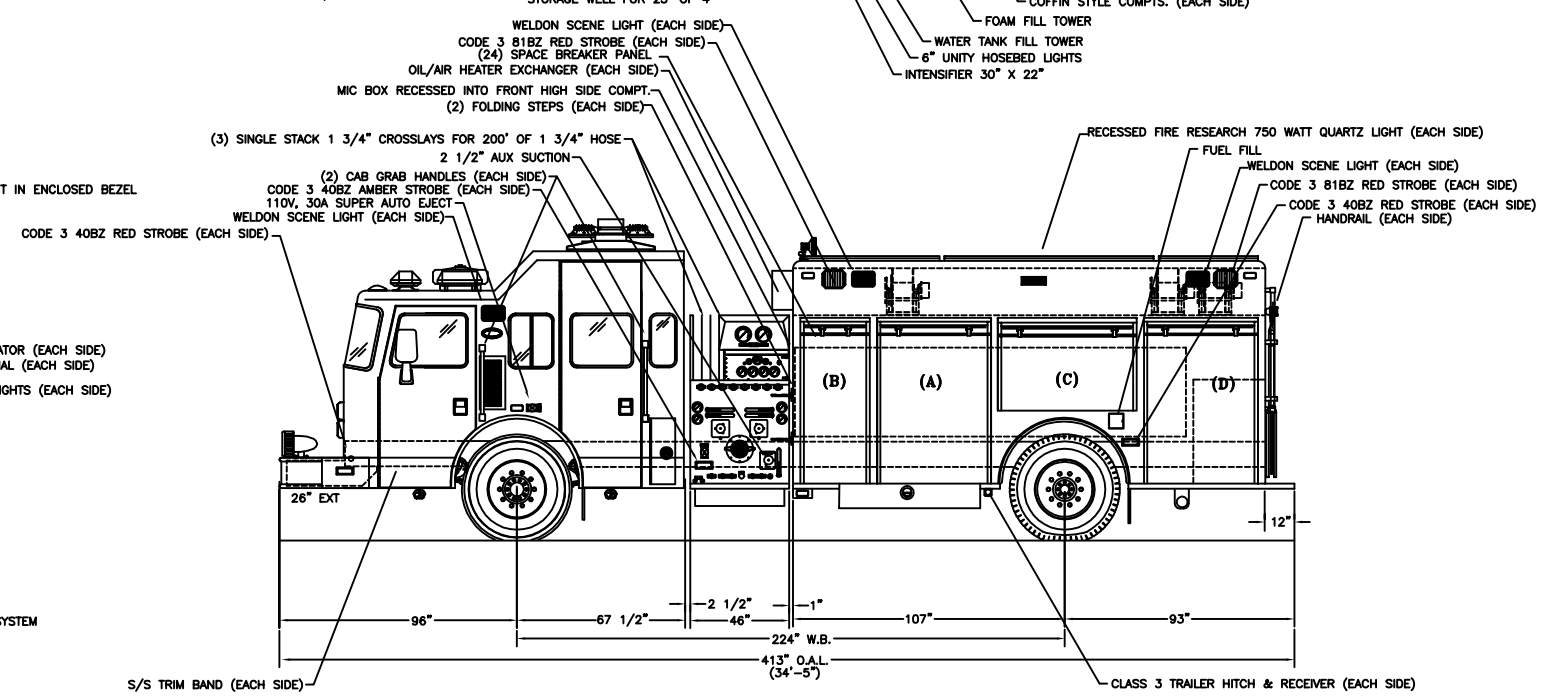

SPECIFICATIONS

CHASSIS: KME EXCEL TILT LFD W/16" R.R.
ENGINE: DETROIT SERIES 60 470 H.P.
TRANSMISSION: ALLISON 4000EVS
FRONT AXLE: DANA EFA20F4 20,000#
REAR AXLE: DANA 26090S 27,000#
PUMP: HALE QMAX 125 1250 GPM SINGLE STAGE
WATER TANK: 750 GALLON UPF POLY II W/40 FOAM

COMPARTMENT SIZE

(A/F): 66"H X 49 1/4"W X 29"D
(B/E): 66"H X 31 1/8"W X 29"D
(C/G): 35 3/4"H X 57 1/2"W X 29"D
(D/H): 66"H X 49 1/4"W X 29"D
(I): 40"H X OPEN THRU X 26"D

DOOR OPENING

(A/F): 62"H LESS LIFT BAR HEIGHT X 46"W
(B/E): 62"H LESS LIFT BAR HEIGHT X 28"W
(C/G): 26 9/16"H LESS LIFT BAR HEIGHT X 53"W
(D/H): 62"H LESS LIFT BAR HEIGHT X 46"W
(I): 38"H LESS LIFT BAR HEIGHT X 36"W

DISCHARGES

(2) 2 1/2" LEFT SIDE
(1) 2 1/2" & (1) 3 1/2" RIGHT SIDE
(1) 3" DECK GUN
(1) 1 1/2" RIGHT SIDE RUNNING BOARD
(2) 2 1/2" FRONT HOSEBED, 1 EACH SIDE
(3) 1 3/4" CROSSLAYS

PLEASE REVIEW AND RETURN A SIGNED COPY.

NAME:

TITLE:

DATE:

CUSTOMER PAINT CODES:

LOWER CAB AND BODY: 73464 RED

CAB TWO TONE: N/A

COMPT. ZOLATONE

SYM	DATE	REVISION DESCRIPTION	APP'D
C	1-31-03	REVISED PER PRE-CON MTG.	CA
B	11-18-02	REVISED PROPOSAL	KJV
A		PROPOSAL	KJV

SALES ENGINEER : CATHERINE ARTHUR

KOVATCH MOBILE EQUIPMENT
ONE INDUSTRIAL COMPLEX
NESQUEHONING, PA 18240

TOLERANCE UNLESS OTHERWISE SPECIFIED
DECIMALS
ONE PLACE: ± .060
TWO PLACE: ± .030
FRACTIONS: ± 1/8"
THREE PLACE: ± .010
ANGLES: ±2°
REMOVE ALL BURRS AND SHARP EDGES

CAD

DATE	SCALE	DRAWN BY	J.J.M.
9-17-02	NONE	APPROVED BY	CA

KME CUSTOM RESCUE/PUMPER

MYERSVILLE V.F.C., MD.

GSO#5477

DO NOT CHANGE MANUALLY