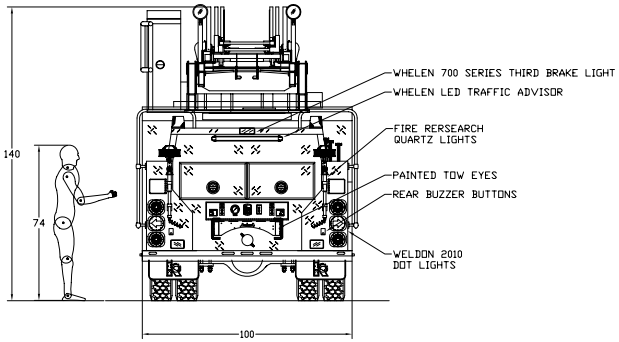

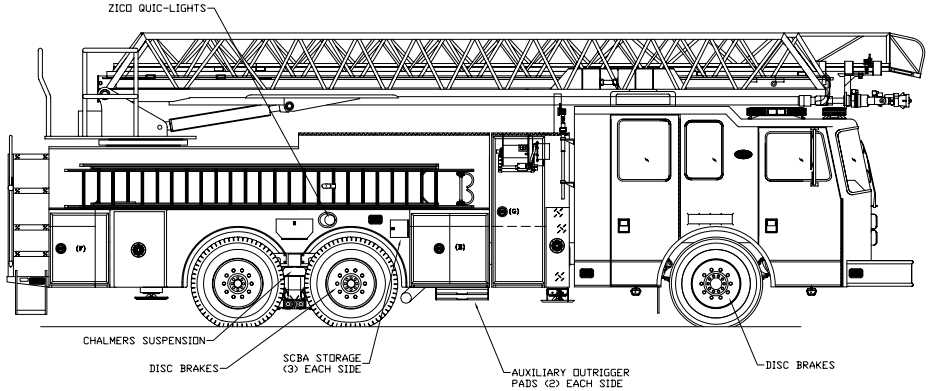

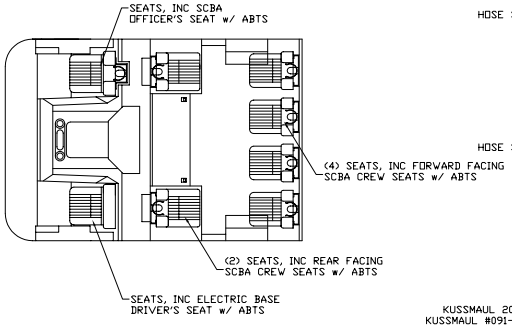

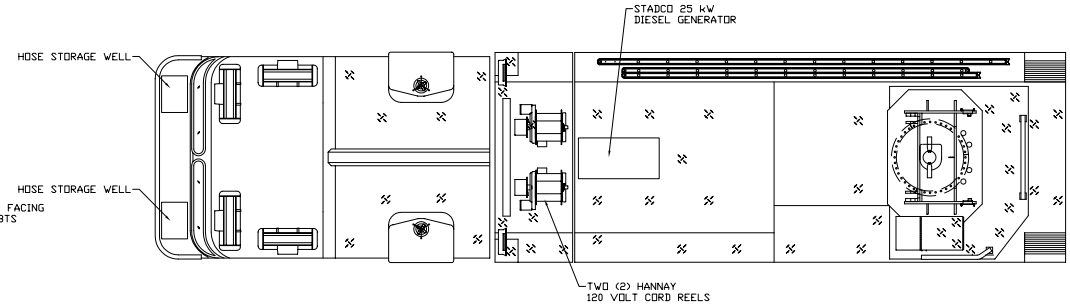

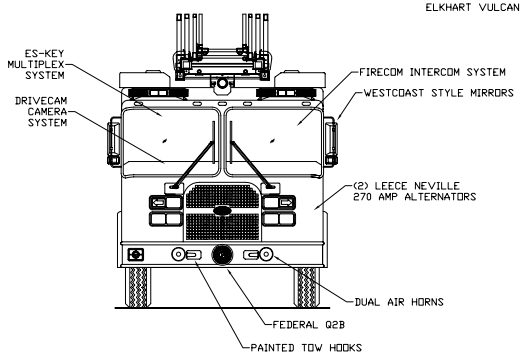

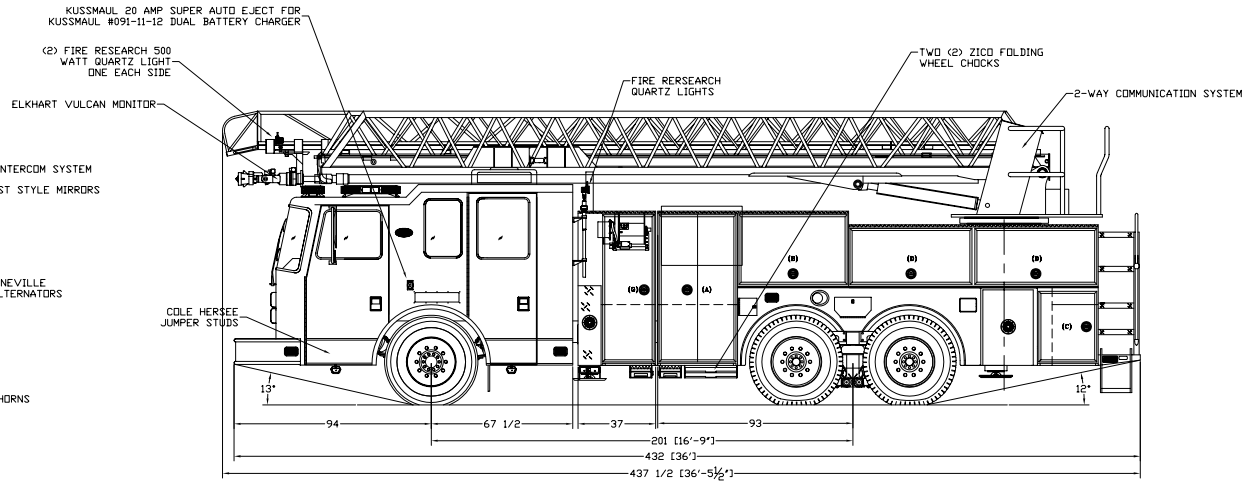

SPECIFICATIONS

CHASSIS: PREDATOR LFD w/ 6" RR
ENGINE: DETROIT SERIES 60, 500 HP w/ JACOBS ENGINE BRAKE
TRANSMISSION: ALLISON EVS4000 5 SPEED AUTOMATIC
FRONT AXLE: MERITOR MFS-20-133A-N; #21,480
REAR AXLE: MERITOR RT-46-160; #48,000
PUMP: N/A
TANK: N/A

COMPARTMENT SIZE

Letter Designation	Door Opening (Inches) Height	Width	Internal Compartment Size (Inches) Height	Width	Depth
(A)	67 1/2	x 34	70 1/2 / 28	x 38	x 27 / 14
(B)	30 1/2	x 49	33 1/2	x 53	x 14
(C)	31	x 25	34 / 26	x 29 / 23	x 25 / 14
(D)	24	x 53-1/2	27	x 59-1/2	x 14
(E)	31	x 34	34 / 28	x 36	x 27 / 14
(F)	31	x 25	34 / 26	x 29 / 23	x 25 / 14
(G)	67	x 22	70	x 26	x 14/TRANS

GROUND LADDERS

1 – ALCO-LITE 35' 3-SECTION; PEL3-35
1 – ALCO-LITE 24' 2-SECTION; PEL-24 (MOUNTED RIGHT SIDE)
1 – ALCO-LITE 16' ROOF w/ HOOKS; FRL-16 (MOUNTED RIGHT SIDE)
1 – ALCO-LITE 16' ROOF w/ HOOKS; FRL-16
1 – ALCO-LITE 10' FOLDING; FL-10
1 – ALCO-LITE 14' ATTIC; AEL-14

PLEASE REVIEW AND RETURN A SIGNED COPY.

NAME:

TITLE:

DATE:

CUSTOMER PAINT CODES:

LOWER CAB AND BODY: TBD
CAB TWO TONE: TBD
LADDER: TBD
COMPT. INTERIORS: TBD

SYM	REVISION DESCRIPTION	APP'D

SALES ENGINEER : XXX

KME FIRE APPARATUS
ONE INDUSTRIAL COMPLEX
NESQUEHONING, PA 18240

CAD

TOLERANCE UNLESS OTHERWISE SPECIFIED
DECIMALS ONE PLACE: ± .060 TWO PLACE: ± .030 THREE PLACE: ± .010
FRACTIONS: ± 1/8" ANGLES: ±2°
REMOVE ALL BURRS AND SHARP EDGES

DATE	SCALE	DRAWN BY JFM
2-16-04	NONE	APPROVED BY XXX

KME 100' AERIALCAT LADDER
#500 TIP LOAD

COTTAGE CITY, MARYLAND

PROPOSAL DRAWING

DO NOT CHANGE MANUALLY